LMD 400-401 & 431 series

Maximum working pressure up to 1.6 MPa (16 bar) - Flow rate up to 590 l/min

FILTER SIZING

INDEX

THE CORRECT FILTER SIZING HAVE TO BE BASED ON THE TOTAL PRESSURE DROP DEPENDING BY THE APPLICATION.
FOR EXAMPLE, THE MAXIMUM TOTAL PRESSURE DROP ALLOWED BY A NEW AND CLEAN RETURN FILTER HAVE TO BE IN THE RANGE 0.4 ÷ 0.6 bar.

The pressure drop calculation is performed by adding together the value of the housing with the value of the filter element. The pressure drop Δpc of the housing is proportional to the fluid density (kg/dm^3); all the graphs in the catalogue are referred to mineral oil with density of 0.86 kg/dm^3.
The filter element pressure drop Δpe is proportional to its viscosity (mm^2/s), the corrective factor Y have to be used in case of an oil viscosity different than 30 mm^2/s (cSt).

Sizing data for single filter element, head at top

Δpc = Filter housing pressure drop [bar]
Δpe = Filter element pressure drop [bar]
Y = Corrective factor Y (see correspondent table), depending on the filter type, on the filter element size, on the filter element length and on the filter media
Q = flow rate (l/min)
V1 reference oil viscosity = 30 mm^2/s (cSt)
V2 = operating oil viscosity in mm^2/s (cSt)

Filter element pressure drop calculation with an oil viscosity different than 30 mm^2/s (cSt)

Δpe = Y : 1000 x Q x (V2:V1)
Δp Tot. = Δpc + Δpe

Verification formula

Δp Tot. ≤ Δp max allowed

Maximum total pressure drop (Δp max) allowed by a new and clean filter

Application	Range (bar)
Suction filters	0.08 ÷ 0.10
Return filters	0.4 ÷ 0.6
Low & Medium Pressure filters	0.4 ÷ 0.6 return lines
	0.3 ÷ 0.5 lubrication lines
	0.3 ÷ 0.4 off-line in power systems
	0.1 ÷ 0.3 off-line in test benches
	0.4 ÷ 0.6 over-boost
High Pressure filters	0.8 ÷ 1.5
Stainless Steel filters	0.8 ÷ 1.5

Generic filter calculation example

Application data:
Tank top return filter
Pressure Pmax = 10 bar
Flow rate Q = 120 l/min
Viscosity V2 = 46 mm^2/s (cSt)
Oil density = 0.86 kg/dm^3
Required filtration efficiency = 25 µm with absolute filtration
With bypass valve and G 1 1/4" inlet connection

Calculation:
Δpc = 0.03 bar (see graphic below)

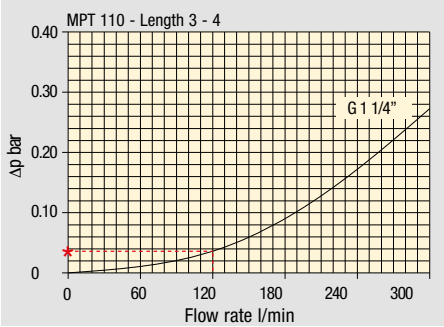

Filter housings Δp pressure drop.
The curves are plotted using mineral oil with density of 0.86 kg/dm^3 in compliance with ISO 3968.
Δp varies proportionally with density.

Δpe = (2.00 : 1000) x 120 x (46 : 30) = 0.37 bar

Filter element		Absolute filtration H Series					Nominal filtration N Series		
Type		A03	A06	A10	A16	A25	P10	P25	M25 M60 M90
Return filters		74.00	50.08	20.00	16.00	9.00	6.43	5.51	4.40
MF 020	2	29.20	24.12	8.00	7.22	5.00	3.33	2.85	2.00
	3	22.00	19.00	6.56	5.33	4.33	1.68	1.44	1.30
MF 030 MFX 030	1	74.00	50.08	20.00	16.00	9.00	6.43	5.51	3.40
MF 100 MFX 100	1	28.20	24.40	8.67	8.17	6.88	4.62	3.96	1.25
	2	17.33	12.50	6.86	5.70	4.00	3.05	2.47	1.10
	3	10.25	9.00	3.65	3.33	2.50	1.63	1.32	0.96
	4	6.10	5.40	2.30	2.20	2.00	1.19	0.96	0.82

Δp Tot. = 0.03 + 0.37 = 0.4 bar

The selection is correct because the total pressure drop value is inside the admissible range for top tank return filters.
In case the allowed max total pressure drop is not verified, it is necessary to repeat the calculation changing the filter length/size.

FILTER SIZING Corrective factor

Corrective factor Y to be used for the filter element pressure drop calculation. The values depend to the filter size and length and to the filter media.
Reference oil viscosity 30 mm²/s

Return filters

Filter element		Absolute filtration H Series					Nominal filtration N Series		
Type		A03	A06	A10	A16	A25	P10	P25	M25 M60 M90
MF 020	1	74.00	50.08	20.00	16.00	9.00	6.43	5.51	4.40
	2	29.20	24.12	8.00	7.22	5.00	3.33	2.85	2.00
	3	22.00	19.00	6.56	5.33	4.33	1.68	1.44	1.30
MF 030 MFX 030	1	74.00	50.08	20.00	16.00	9.00	6.43	5.51	3.40
MF 100 MFX 100	1	28.20	24.40	8.67	8.17	6.88	4.62	3.96	1.25
	2	17.33	12.50	6.86	5.70	4.00	3.05	2.47	1.10
	3	10.25	9.00	3.65	3.33	2.50	1.63	1.32	0.96
	4	6.10	5.40	2.30	2.20	2.00	1.19	0.96	0.82
MF 180 MFX 180	1	3.67	3.05	1.64	1.56	1.24	1.18	1.06	0.26
	2	1.69	1.37	0.68	0.54	0.51	0.43	0.39	0.12
MF 190 MFX 190	2	1.69	1.37	0.60	0.49	0.44	0.35	0.31	0.11
MF 400 MFX 400	1	3.20	2.75	1.39	1.33	1.06	0.96	0.87	0.22
	2	2.00	1.87	0.88	0.85	0.55	0.49	0.45	0.13
	3	1.90	1.60	0.63	0.51	0.49	0.39	0.35	0.11
MF 750 MFX 750	1	1.08	0.84	0.49	0.36	0.26	0.21	0.19	0.06
MLX 250	2	3.00	3.04	1.46	1.25	1.17	-	-	M25 0.20
MLX 660	2	1.29	1.26	0.52	0.44	0.38	-	-	M25 0.10
CU 025		78.00	48.00	28.00	24.00	9.33	9.33	8.51	1.25
CU 040		25.88	20.88	10.44	10.00	3.78	3.78	3.30	1.25
CU 100		15.20	14.53	5.14	4.95	2.00	2.00	0.17	1.10
CU 250		3.25	2.55	1.55	1.35	0.71	0.71	0.59	0.25
CU 630		1.96	1.68	0.85	0.72	0.42	0.42	0.36	0.09
CU 850		1.06	0.84	0.42	0.33	0.17	0.17	0.13	0.04
MR 100	1	19.00	17.00	6.90	6.30	4.60	2.94	2.52	1.60
	2	11.70	10.80	4.40	4.30	3.00	2.94	2.52	1.37
	3	7.80	6.87	3.70	3.10	2.70	2.14	1.84	1.34
	4	5.50	4.97	2.60	2.40	2.18	1.72	1.47	1.34
	5	4.20	3.84	2.36	2.15	1.90	1.60	1.37	1.34
MR 250	1	5.35	4.85	2.32	1.92	1.50	1.38	1.20	0.15
	2	4.00	3.28	1.44	1.10	1.07	0.96	0.83	0.13
	3	2.60	2.20	1.08	1.00	0.86	0.77	0.64	0.12
	4	1.84	1.56	0.68	0.56	0.44	0.37	0.23	0.11
MR 630	1	3.10	2.48	1.32	1.14	0.92	0.83	0.73	0.09
	2	2.06	1.92	0.82	0.76	0.38	0.33	0.27	0.08
	3	1.48	1.30	0.60	0.56	0.26	0.22	0.17	0.08
	4	1.30	1.20	0.48	0.40	0.25	0.21	0.16	0.08
	5	0.74	0.65	0.30	0.28	0.13	0.10	0.08	0.04
MR 850	1	0.60	0.43	0.34	0.25	0.13	0.12	0.09	0.03
	2	0.37	0.26	0.23	0.21	0.11	0.08	0.07	0.03
	3	0.27	0.18	0.17	0.17	0.05	0.04	0.04	0.02
	4	0.23	0.16	0.13	0.12	0.04	0.03	0.03	0.02

Return / Suction filters

Filter element		Absolute filtration		
Type		A10	A16	A25
RSX 116	1	5.12	4.33	3.85
	2	2.22	1.87	1.22
RSX 165	1	2.06	1.75	1.46
	2	1.24	1.05	0.96
	3	0.94	0.86	0.61

Filter element		Absolute filtration N Series							
Type		A03	A06	A10	A16	A25	P10	P25	M25 M60 M90
CU 110	1	16.25	15.16	8.75	8.14	5.87	2.86	2.65	0.14
	2	12.62	10.44	6.11	6.02	4.16	1.60	1.49	0.12
	3	8.57	7.95	5.07	4.07	2.40	1.24	1.15	0.11
	4	5.76	4.05	2.80	2.36	1.14	0.91	0.85	0.05

Low & Medium pressure filters

Filter element		Absolute filtration N-W Series					Nominal filtration N Series		
Type		A03	A06	A10	A16	A25	P10	P25	M25
CU 110	1	16.25	15.16	8.75	8.14	5.87	2.86	2.65	0.14
	2	12.62	10.44	6.11	6.02	4.15	1.60	1.49	0.12
	3	8.57	7.95	5.07	4.07	2.40	1.24	1.15	0.11
	4	5.76	4.05	2.80	2.36	1.14	0.91	0.85	0.05
CU 210	1	5.30	4.80	2.00	1.66	1.32	0.56	0.43	0.12
	2	3.44	2.95	1.24	1.09	0.70	0.42	0.35	0.09
	3	2.40	1.70	0.94	0.84	0.54	0.33	0.23	0.05
DN	016	7.95	7.20	3.00	2.49	1.98	0.84	0.65	0.18
	025	5.00	4.53	1.89	1.57	1.25	0.53	0.41	0.11
	040	3.13	2.66	1.12	0.98	0.63	0.38	0.32	0.08
CU 400	2	3.13	2.55	1.46	1.22	0.78	0.75	0.64	0.19
	3	2.15	1.70	0.94	0.78	0.50	0.40	0.34	0.10
	4	1.60	1.28	0.71	0.61	0.40	0.34	0.27	0.08
	5	1.00	0.83	0.47	0.34	0.20	0.24	0.19	0.06
	6	0.82	0.58	0.30	0.27	0.17	0.22	0.18	0.05
CU 900	1	0.86	0.63	0.32	0.30	0.21	-	-	0.05
CU 950	2	1.03	0.80	0.59	0.40	0.26	-	-	0.05
	3	0.44	0.40	0.27	0.18	0.15	-	-	0.02
MR 630	7	0.88	0.78	0.36	0.34	0.16	0.12	0.96	0.47

Corrective factor Y to be used for the filter element pressure drop calculation. The values depend to the filter size and length and to the filter media.
Reference oil viscosity 30 mm²/s

High pressure filters

Filter element		Absolute filtration N - R Series					Nominal filtration N Series
Type		A03	A06	A10	A16	A25	M25
HP 011	1	332.71	250.07	184.32	152.36	128.36	-
	2	220.28	165.56	74.08	59.13	37.05	-
	3	123.24	92.68	41.48	33.08	20.72	-
	4	77.76	58.52	28.37	22.67	16.17	-
HP 039	2	70.66	53.20	25.77	20.57	14.67	4.90
	3	36.57	32.28	18.00	13.38	8.00	2.90
	4	26.57	23.27	12.46	8.80	5.58	2.20
HP 050	1	31.75	30.30	13.16	12.3	7.29	1.60
	2	24.25	21.26	11.70	9.09	4.90	1.40
	3	17.37	16.25	8.90	7.18	3.63	1.25
	4	12.12	10.75	6.10	5.75	3.08	1.07
	5	7.00	6.56	3.60	3.10	2.25	0.80
HP 065	1	58.50	43.46	23.16	19.66	10.71	1.28
	2	42.60	25.64	16.22	13.88	7.32	1.11
	3	20.50	15.88	8.18	6.81	3.91	0.58
HP 135	1	20.33	18.80	9.71	8.66	4.78	2.78
	2	11.14	10.16	6.60	6.38	2.22	1.11
	3	6.48	6.33	3.38	3.16	2.14	1.01
HP 150	1	17.53	15.91	7.48	6.96	5.94	1.07
	2	8.60	8.37	3.54	3.38	3.15	0.58
	3	6.53	5.90	2.93	2.79	2.12	0.49
HP 320	1	10.88	9.73	5.02	3.73	2.54	1.04
	2	4.40	3.83	1.75	1.48	0.88	0.71
	3	2.75	2.11	1.05	0.87	0.77	0.61
	4	2.12	1.77	0.98	0.78	0.55	0.47
HP 500	1	4.44	3.67	2.30	2.10	1.65	0.15
	2	3.37	2.77	1.78	1.68	1.24	0.10
	3	2.22	1.98	1.11	1.09	0.75	0.08
	4	1.81	1.33	0.93	0.86	0.68	0.05
	5	1.33	1.15	0.77	0.68	0.48	0.04

Filter element		Absolute filtration N Series					Nominal filtration N Series
Type		A03	A06	A10	A16	A25	M25
HF 320	1	3.65	2.95	2.80	1.80	0.90	0.38
	2	2.03	1.73	1.61	1.35	0.85	0.36
	3	1.84	1.42	1.32	1.22	0.80	0.35

Suction filters

Filter element	Nominal filtration N Series	
Type	P10	P25
SF 250	65	21

Stainless steel high pressure filters

Filter element		Absolute filtration N Series				
Type		A03	A06	A10	A16	A25
HP 011	1	332.71	250.07	184.32	152.36	128.36
	2	220.28	165.56	74.08	59.13	37.05
	3	123.24	92.68	41.48	33.08	20.72
	4	77.76	58.52	28.37	22.67	16.17
HP 039	2	70.66	53.20	25.77	20.57	14.67
	3	36.57	32.28	18.00	13.38	8.00
	4	26.57	23.27	12.46	8.80	5.58
HP 050	1	31.75	30.30	13.16	12.3	7.29
	2	24.25	21.26	11.70	9.09	4.90
	3	17.37	16.25	8.90	7.18	3.63
	4	12.12	10.75	6.10	5.75	3.08
	5	7.00	6.56	3.60	3.10	2.25
HP 135	1	20.33	18.80	9.71	8.66	4.78
	2	11.14	10.16	6.60	6.38	2.22
	3	6.48	6.33	3.38	3.16	2.14

Filter element		Absolute filtration H - U Series				
Type		A03	A06	A10	A16	A25
HP 011	1	424.58	319.74	235.17	194.44	163.78
	2	281.06	211.25	94.53	75.45	47.26
	3	130.14	97.50	43.63	34.82	21.81
	4	109.39	82.25	36.79	29.37	18.40
HP 039	2	73.00	57.00	28.00	24.00	17.20
	3	40.90	36.33	21.88	18.80	11.20
	4	31.50	28.22	17.22	9.30	6.70
HP 050	1	47.33	34.25	21.50	20.50	14.71
	2	29.10	25.95	14.04	10.90	5.88
	3	20.85	19.50	10.68	8.61	4.36
	4	14.55	12.90	7.32	6.90	3.69
	5	9.86	9.34	6.40	4.80	2.50
HP 135	1	29.16	25.33	13.00	12.47	5.92
	2	14.28	11.04	7.86	7.60	4.44
	3	8.96	7.46	4.89	4.16	3.07

FILTER SIZING Selection Software

Step 1 Select “FILTERS”

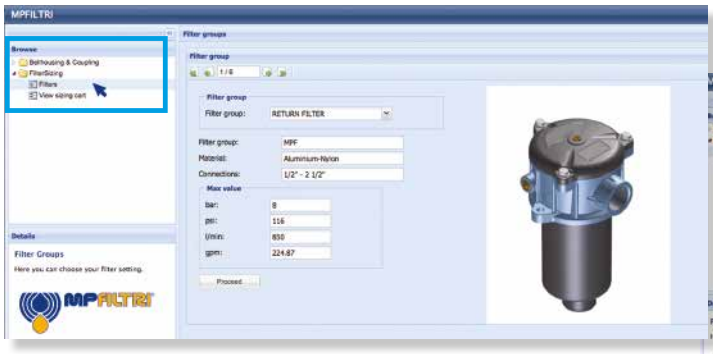

Step 2 Choose filter group (Return Filter, Pressure Filter, etc.)

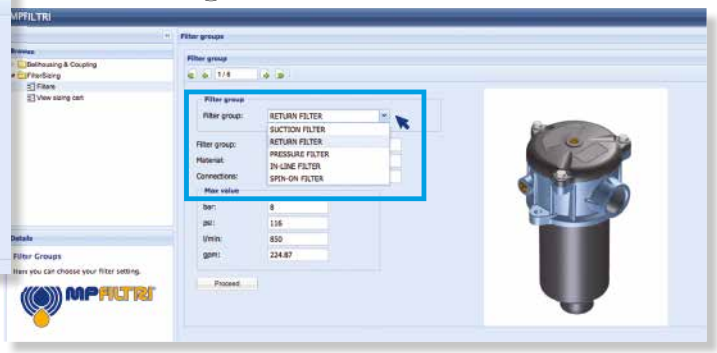

Step 3 Choose filter type (MPF, MPT, etc.) in function of the max working pressure and the max flow rate

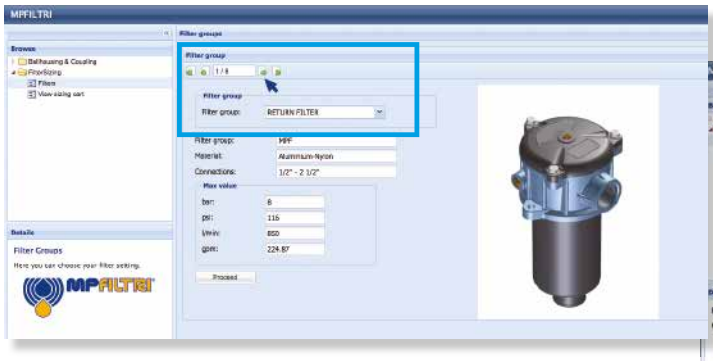

Step 4 Push “PROCEED”

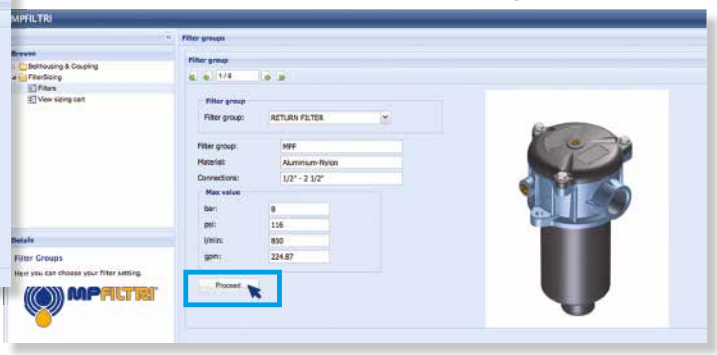

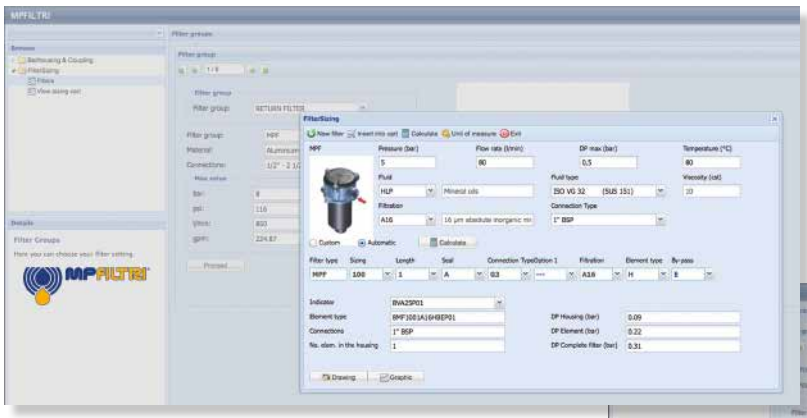

Step 5

Insert all application data to calculate the filter size following the sequence:

- working pressure
- working flow rate
- working pressure drop
- working temperature
- fluid material and fluid type
- filtration media
- connection type

Step 6

Push “CALCULATE” to have result; in case of any mistake, the system will advice which parameter is out of range to allow to modify/adjust the selection

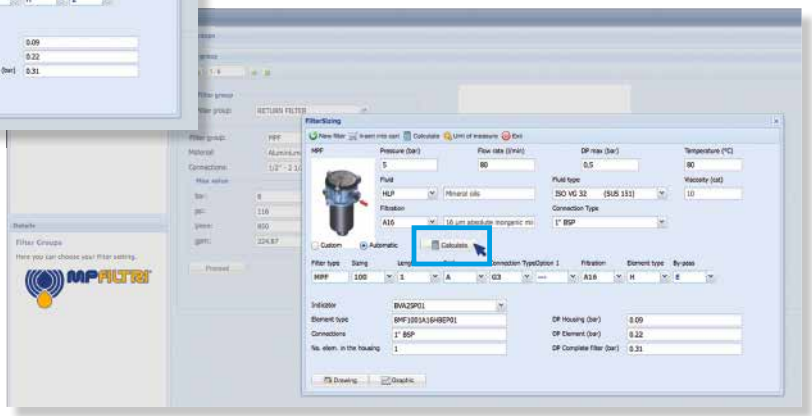

Step 7

Download PDF Datasheet “Report.aspx” pushing the button “Drawing”

LMD 400-401 & 431 series

Maximum working pressure up to 1.6 MPa (16 bar) - Flow rate up to 590 l/min

Description

Low & Medium Pressure filters

Duplex
Maximum working pressure up to 1.6 MPa (16 bar)
Flow rate up to 590 l/min

LMD400 is a range of versatile low pressure duplex filter with integrated changeover function to allow the filter element replacement without the system shut-down.
They are directly connected to the lines of the system through the hydraulic fittings.

Available features:
- 2 1/2" flanged connections, for a maximum flow rate of 590 l/min
- LMD400: In-line connections
- LMD401: In-line connections with compact design
- LMD431: In-line connections with compact design and base mounting
- Base-mounting design also available, for ease of the replacement of the filter element
- Fine filtration rating, to get a good cleanliness level into the system
- Water removal elements, to remove the free water from the hydraulic fluid
- Balancing valve, to equalize the housing pressure before the switch
- Bypass valve, to relieve excessive pressure drop across the filter media
- Vent ports, to avoid air trapped into the filter going into the system
- Drain ports, to remove the fluid from the housing prior the maintenance work
- Visual, electrical and electronic differential clogging indicators

Common applications:
- Systems where shut-down causes high costs
- Systems where shut-down causes safety issues

Technical data

Filter housing materials
- Head: Anodized Aluminium
- Housing: Anodized Aluminium
- Manifolds: Steel - Painted black
- Bypass valve: Steel
- 3-way ball valve: Steel housings - Stainless Steel ball
- Valve: Phosphatized Steel - Stainless Steel

Pressure
Test pressure: 2.5 MPa (25 bar)

Bypass valve
- Opening pressure 350 kPa (3.5 bar) ±10%
- Other opening pressures on request.

Δp element type
- Microfibre filter elements - series N - W: 20 bar
- Fluid flow through the filter element from OUT to IN

Seals
FPM series V

Temperature
From -25° C to +110° C

Connections
- LMD 400-401: In-line Inlet/Outlet
- LMD 401: Same side
- LMD 400-401-431: In-Line

Note
LMP 400 - 401 - 431 filters are provided for vertical mounting

Weights [kg] and volumes [dm³]

Filter series	Weights [kg]			Volumes [dm³]		
	Length 4	5	6	Length 4	5	6
LMD 400 - 401	60	65	72	20	28	33
LMD 431	-	68	78	-	28	33

Pressure drop

Filter housings Δp pressure drop

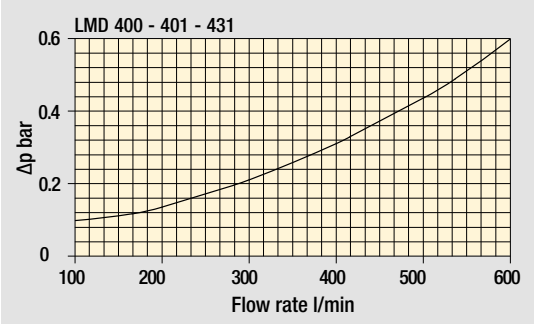

Bypass valve pressure drop

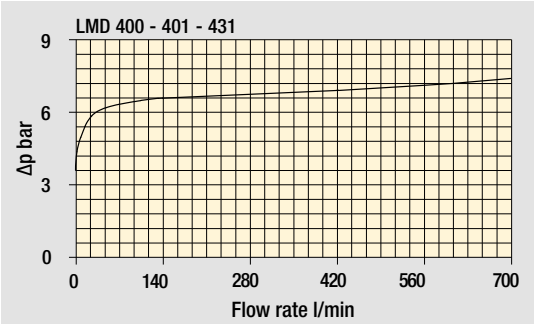

The curves are plotted using mineral oil with density of 0.86 kg/dm³ in compliance with ISO 3968.
Δp varies proportionally with density.

Flow rates [l/min]

		Filter element design - N Series							
Filter series	Length	A03	A06	A10	A16	A25	M25 M60 M90 M250	P10	P25
LMD 400 - 401	**4**	308	349	453	474	530	628	547	567
	5	395	427	509	547	589	637	577	592
	6	429	483	558	568	597	639	583	597
LMD 431	**5**	395	427	509	547	589	637	577	592
	6	429	483	558	568	597	639	583	597

Maximum flow rate for a complete low and medium pressure filter with a pressure drop Δp = 0.7 bar.
The reference fluid has a kinematic viscosity of 30 mm²/s (cSt) and a density of 0.86 kg/dm³.
For different pressure drop or fluid viscosity we recommend to use our selection software available on www.mpfiltri.com.
Please, contact our Sales Department for further additional information.

Hydraulic symbols

Filter series	Execution S	Execution B
LMD 400 - 401	•	•
LMD 431	•	•

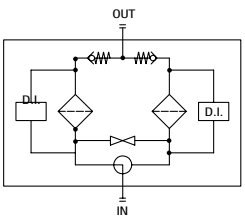

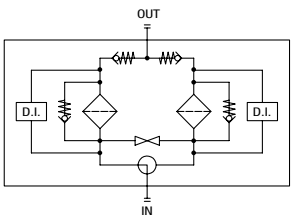

Focus on

A	Breather plug G 3/8” - A/F 8
B	Indicator port Plug T2 - A/F 30
C	Compensation valve
D	Oil drain plug G 3/8” - A/F 8

LMP 400 - 401 & 431
Fit one differential indicator for individual filter assembly.

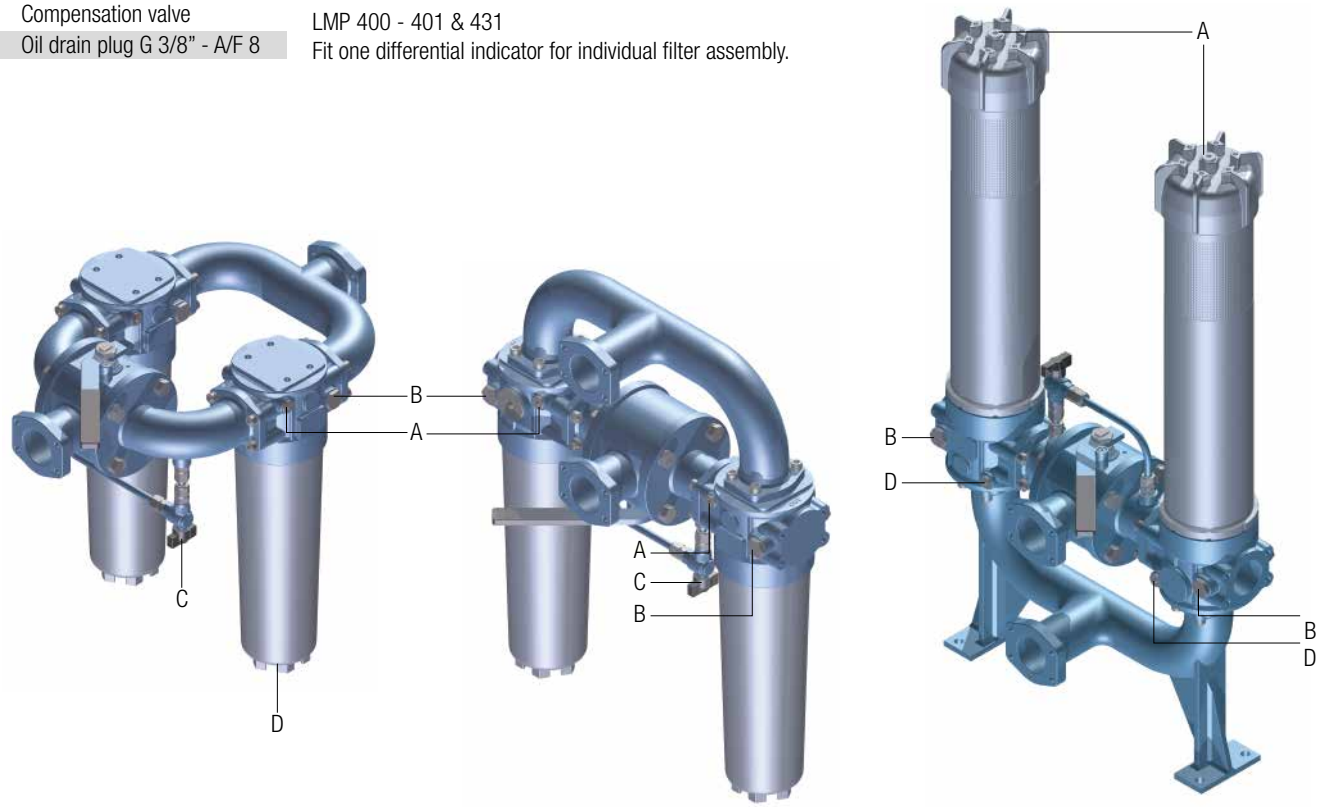

LMD 431: Execution P02

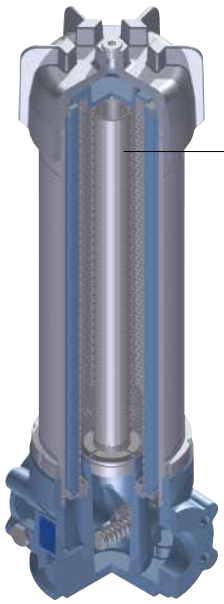

“Internal tube for reduced flow rate” is recommended for flow rate values below 150 l/min.

The use of option P02 makes it easier to fill the housing with the operating fluid.

LMD 400-401

Designation & Ordering code

COMPLETE FILTER

Configuration example: LMD401 | 4 | B | V | F1 | A10 | N | P01

Series and size

LMD400 | **LMD401**

Length

4 | **5** | **6**

Bypass valve

S Without bypass

B 3.5 bar

Seals and treatments	Filtration rating Axx	Mxx	Pxx
V FPM	•	•	•

Connections	LMD400	LMD401
F1 2 1/2" SAE 3000 psi/M	•	•
F2 2 1/2" SAE 3000 psi/UNC	•	•
F3 2 1/2" SAE 3000 psi/M, In-line connections		•
F4 2 1/2" SAE 3000 psi/UNC, In-line connections		•

Filtration rating (filter media)

A03 Inorganic microfiber 3 µm	**M25** Wire mesh 25 µm
A06 Inorganic microfiber 6 µm	**M60** Wire mesh 60 µm
A10 Inorganic microfiber 10 µm	**M90** Wire mesh 90 µm
A16 Inorganic microfiber 16 µm	**P10** Resin impregnated paper 10 µm
A25 Inorganic microfiber 25 µm	**P25** Resin impregnated paper 25 µm

WA025 Water absorber inorganic microfiber 25 µm

Element Δp

N 20 bar

Execution	Filter length 4	5	6
P01 MP Filtri standard	•	•	•
P02 Maintenance from the bottom of the housing		•	•
Pxx Customized			

FILTER ELEMENT

Configuration example: CU400 | 4 | A10 | V | N | P01

Element series and size

CU400

Element length

4 | **5** | **6**

Filtration rating (filter media)

A03 Inorganic microfiber 3 µm	**M25** Wire mesh 25 µm
A06 Inorganic microfiber 6 µm	**M60** Wire mesh 60 µm
A10 Inorganic microfiber 10 µm	**M90** Wire mesh 90 µm
A16 Inorganic microfiber 16 µm	**P10** Resin impregnated paper 10 µm
A25 Inorganic microfiber 25 µm	**P25** Resin impregnated paper 25 µm

WA025 Water absorber inorganic microfiber 25 µm

Seals	Filtration rating Axx	Mxx	Pxx
V FPM	•	•	•

Element Δp

N 20 bar

Execution

P01 MP Filtri standard

Pxx Customized

ACCESSORIES

Differential indicators	page
DEA Electrical differential indicator	445
DEM Electrical differential indicator	445-446
DLA Electrical / visual differential indicator	446-447
DLE Electrical / visual differential indicator	447
DTA Electronic differential indicator	448
DVA Visual differential indicator	448
DVM Visual differential indicator	448

Additional features	page
T2 Plug	449

Dimensions

LMD400	
Length 4	
Connections	**R**
F1	M12
F2	1/2" UNC
F3	M12
F4	1/2" UNC

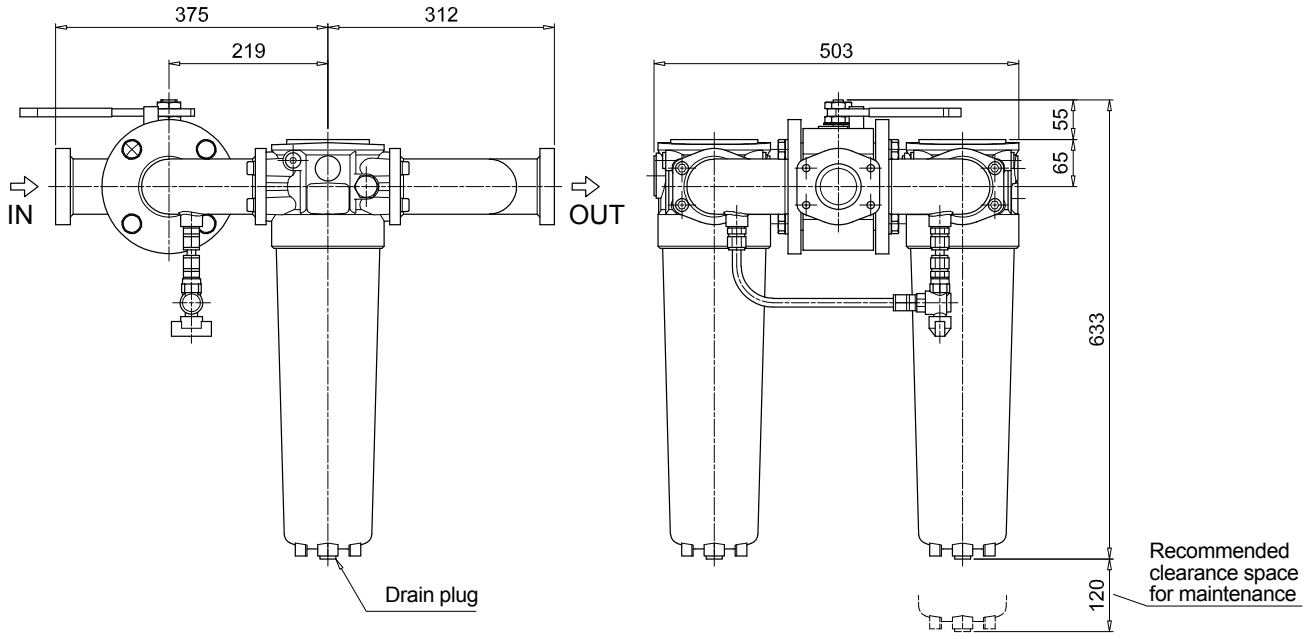

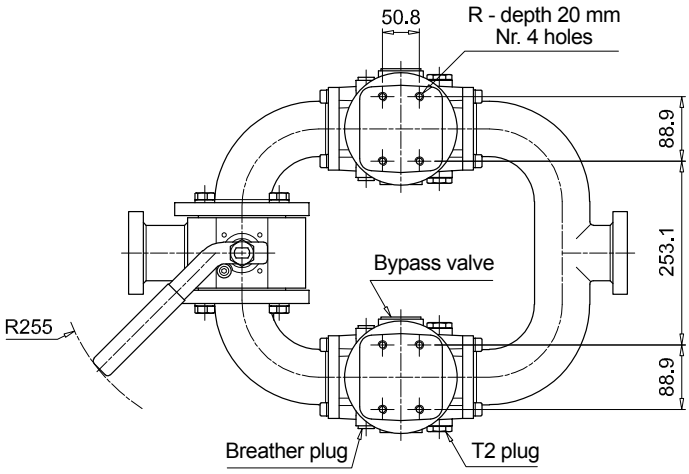

T2 plug =
Connection for differential indicator

LMD 400-401

Dimensions

LMD400			
Length 5 - 6			
Filter length	H [mm]	H2 [mm] Execution P01	H2 [mm] Execution P02
5	883	120	660
6	1213	120	690

Connections	R
F1	M12
F2	1/2" UNC
F3	M12
F4	1/2" UNC

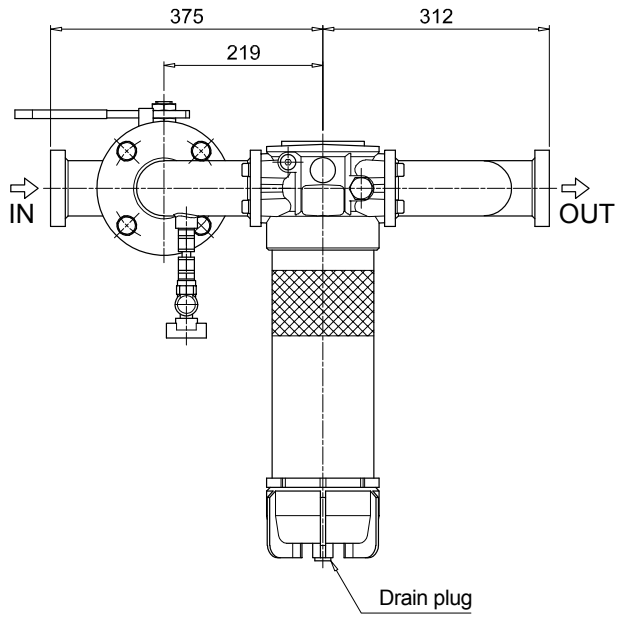

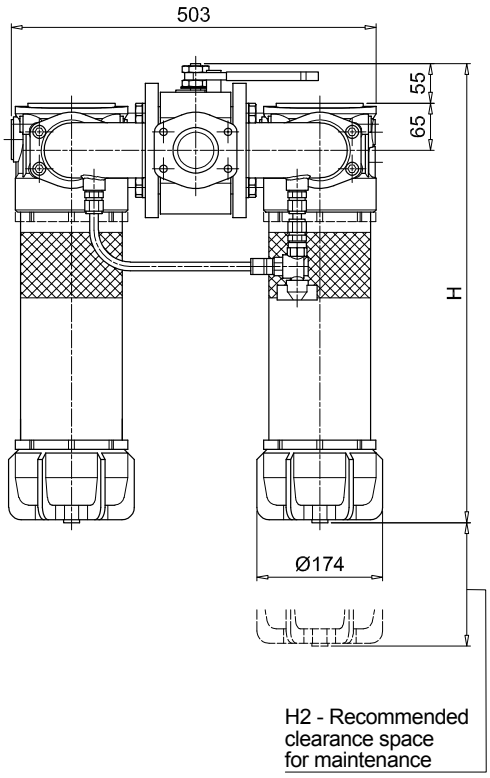

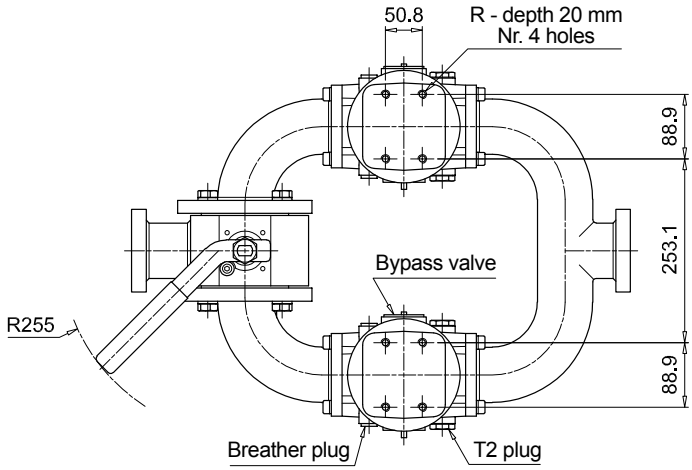

T2 plug =
Connection for differential indicator

LMD401	
Length 4	
Connections	**R**
F1	M12
F2	1/2" UNC
F3	M12
F4	1/2" UNC

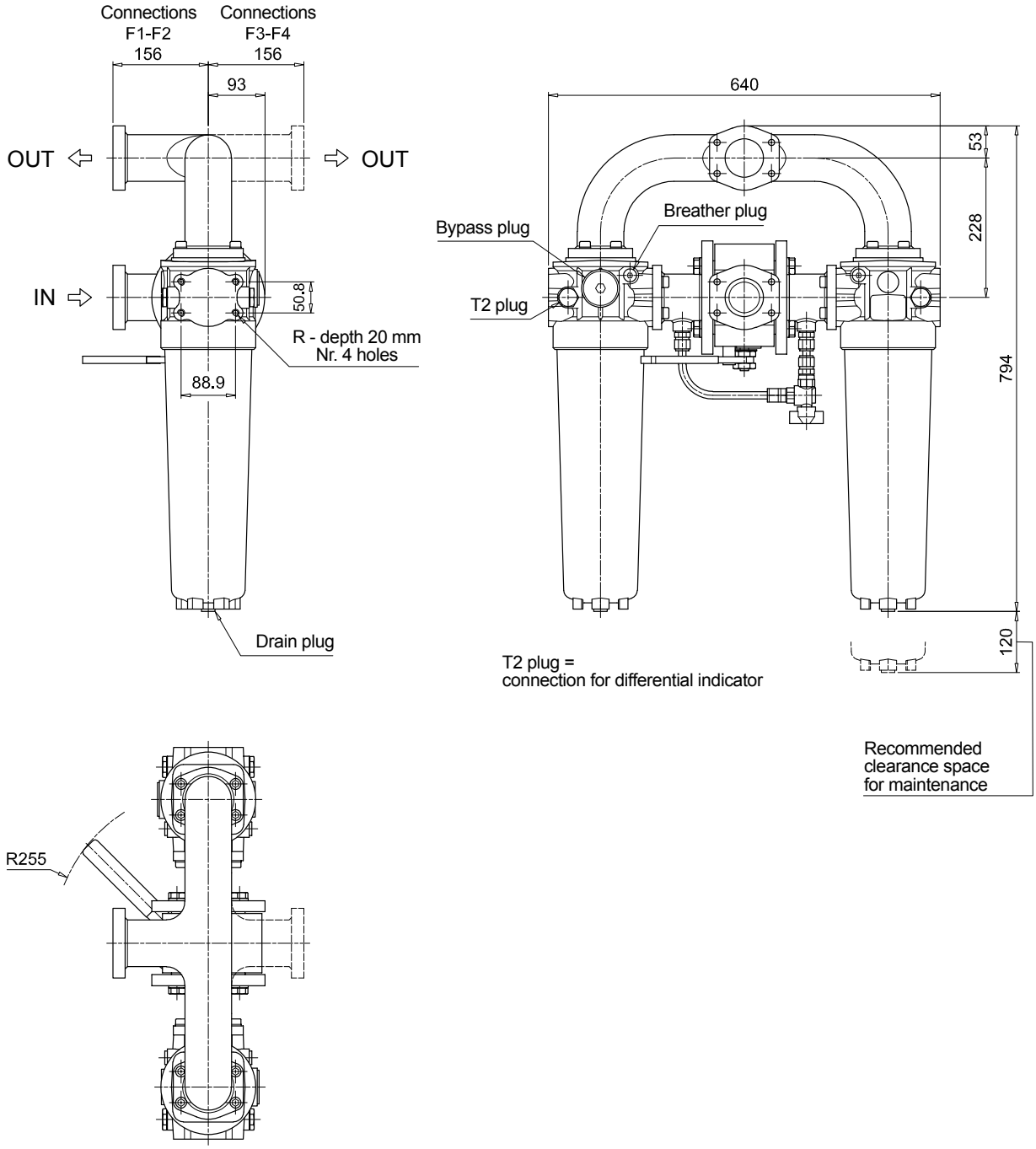

LMD 400-401

Dimensions

LMD401			
Length 5 - 6			
Filter length	**H [mm]**	**H2 [mm] Execution P01**	**H2 [mm] Execution P02**
5	1044	120	660
6	1374	120	690

Connections	R
F1	M12
F2	1/2" UNC
F3	M12
F4	1/2" UNC

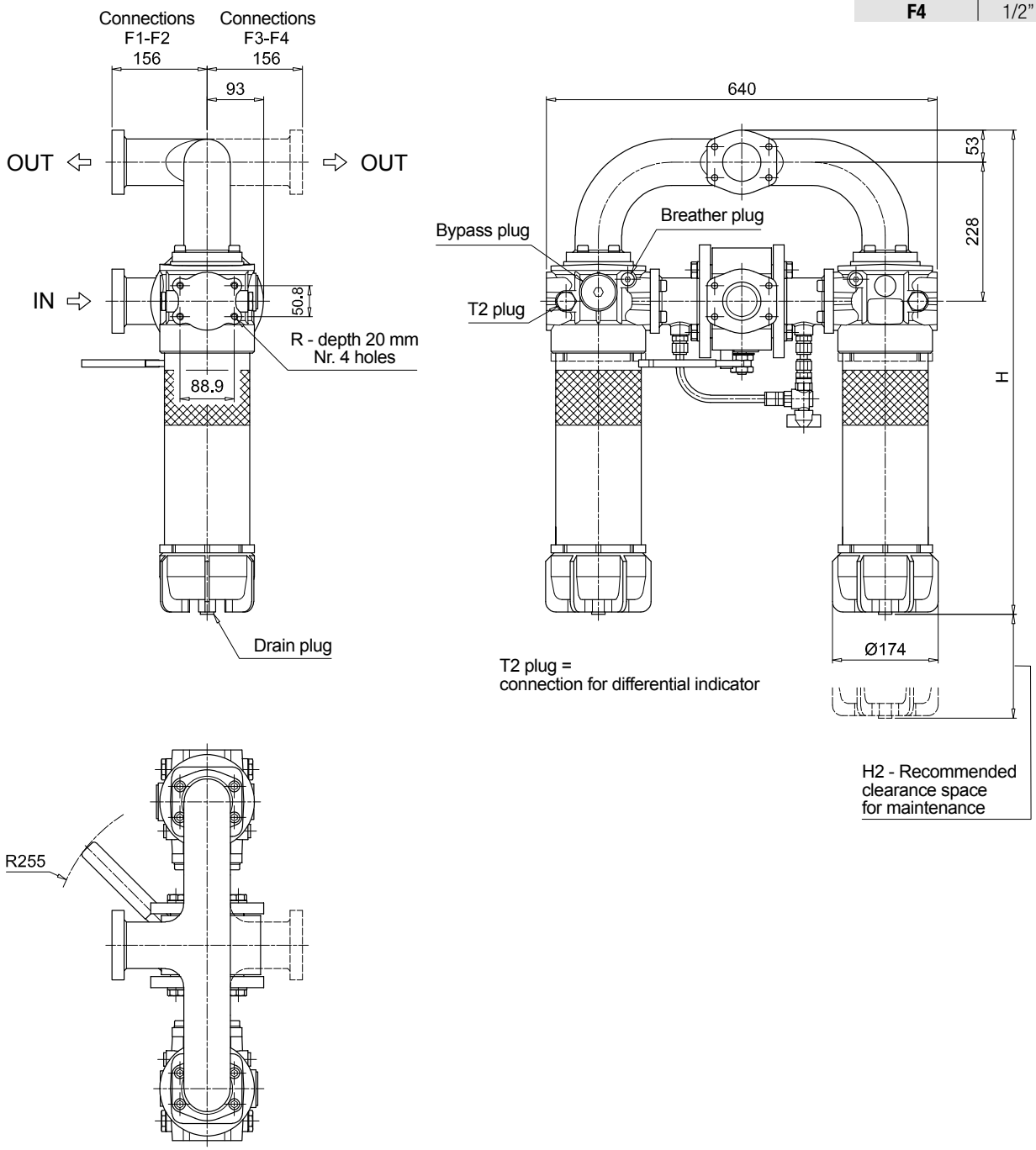

LMD 431

Designation & Ordering code

COMPLETE FILTER

Configuration example: LMD431 | 5 | B | V | F1 | A10 | N | P01

Series and size

LMD431

Length

5 | **6**

Bypass valve

S Without bypass

B 3.5 bar

Seals and treatments

	Filtration rating Axx	Mxx	Pxx
V FPM	•	•	•

Connections

F1 2 1/2" SAE 3000 psi/M
F2 2 1/2" SAE 3000 psi/UNC
F3 2 1/2" SAE 3000 psi/M, In-line connections
F4 2 1/2" SAE 3000 psi/UNC, In-line connections

Filtration rating (filter media)

A03 Inorganic microfiber 3 µm
A06 Inorganic microfiber 6 µm
A10 Inorganic microfiber 10 µm
A16 Inorganic microfiber 16 µm
A25 Inorganic microfiber 25 µm
M25 Wire mesh 25 µm
M60 Wire mesh 60 µm
M90 Wire mesh 90 µm
P10 Resin impregnated paper 10 µm
P25 Resin impregnated paper 25 µm

WA025 Water absorber inorganic microfiber 25 µm

Element Δp

N 20 bar

Execution

P01 MP Filtri standard
P02 With internal tube for reduced flow rate
Pxx Customized

FILTER ELEMENT

Configuration example: CU400 | 5 | A10 | V | N | P01

Element series and size

CU400

Element length

5 | **6**

Filtration rating (filter media)

A03 Inorganic microfiber 3 µm
A06 Inorganic microfiber 6 µm
A10 Inorganic microfiber 10 µm
A16 Inorganic microfiber 16 µm
A25 Inorganic microfiber 25 µm
M25 Wire mesh 25 µm
M60 Wire mesh 60 µm
M90 Wire mesh 90 µm
P10 Resin impregnated paper 10 µm
P25 Resin impregnated paper 25 µm

WA025 Water absorber inorganic microfiber 25 µm

Seals

	Filtration rating Axx	Mxx	Pxx
V FPM	•	•	•

Element Δp

N 20 bar

Execution

P01 MP Filtri standard
Pxx Customized

ACCESSORIES

Differential indicators		page
DEA	Electrical differential indicator	445
DEM	Electrical differential indicator	445-446
DLA	Electrical / visual differential indicator	446-447
DLE	Electrical / visual differential indicator	447
DTA	Electronic differential indicator	448
DVA	Visual differential indicator	448
DVM	Visual differential indicator	448

Additional features		page
T2	Plug	449

LMD431		
Filter length	H [mm]	H2 [mm]
5	1161	660
6	1491	690

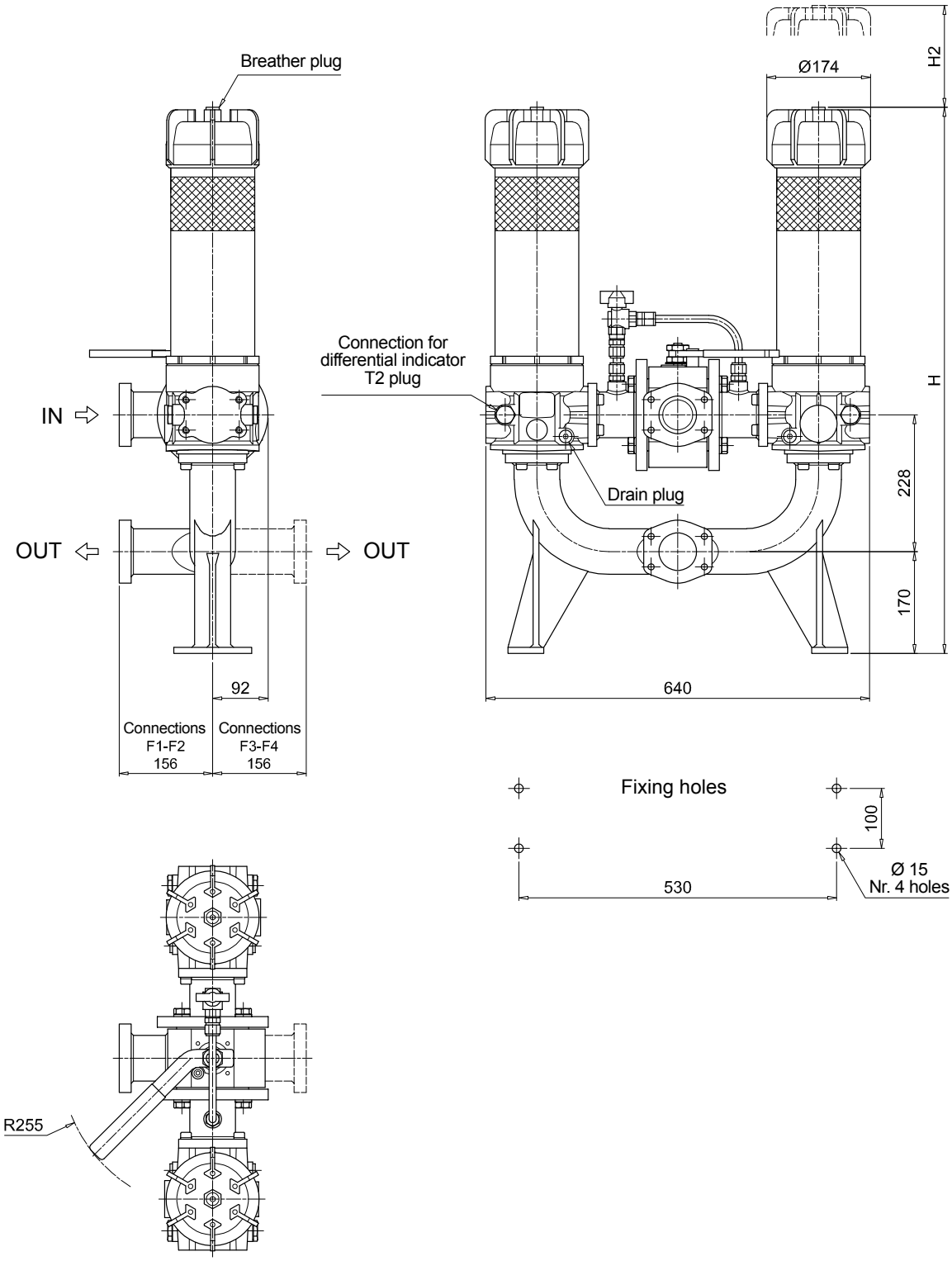

Order number for spare parts

LMD 400

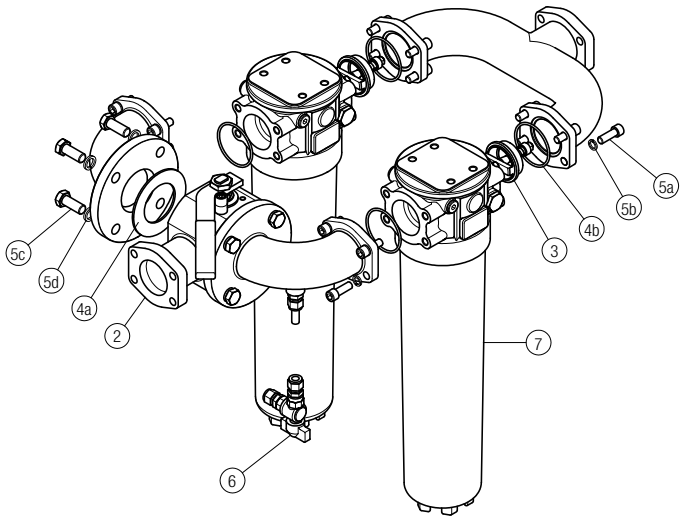

LMD 401

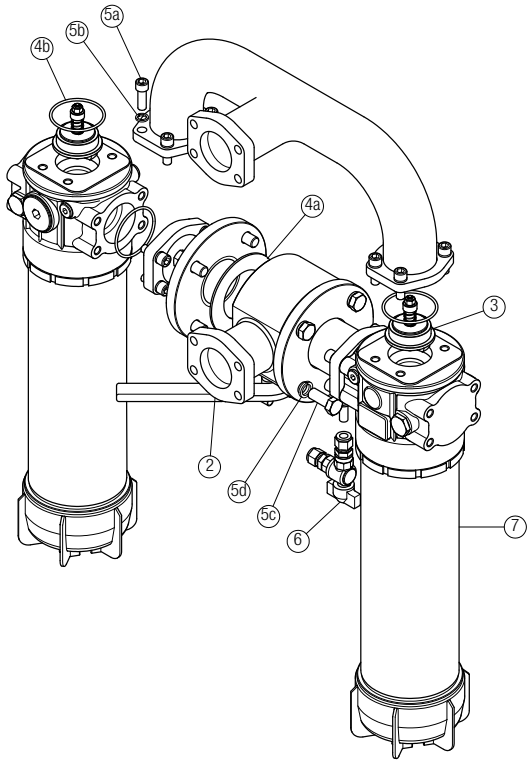

LMD 431

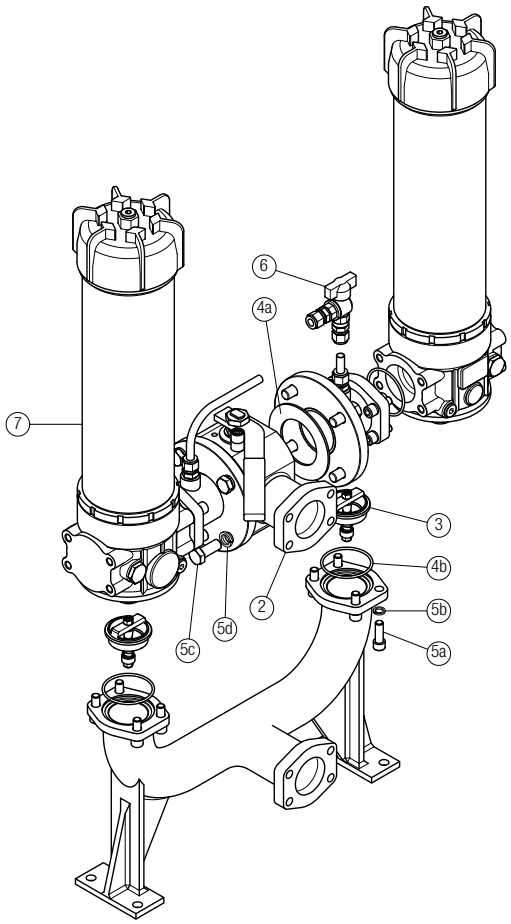

Item:	Q.ty: 1 pc. 2		Q.ty: 2 pcs. 3	Q.ty: 1 pc. 4 (4a ÷ 4b)	Q.ty: 1 pc. 5 (5a ÷ 5d)	Q.ty: 1 pc. 6	Q.ty: 2 pcs. 7
Filter series	**3-way ball valve PN 16** 2 1/2" SAE 3000 psi/M	2 1/2" SAE 3000 psi/UNC	**One-way valve**	**Seal Kit**	**Threaded fasteners kit**	**Kit ball valve with hose fitting**	**Filter** See order table
LMD 400-401-431	02001440	02001441	02001429	02050399	02049062	02025043	LMP400xF2.....